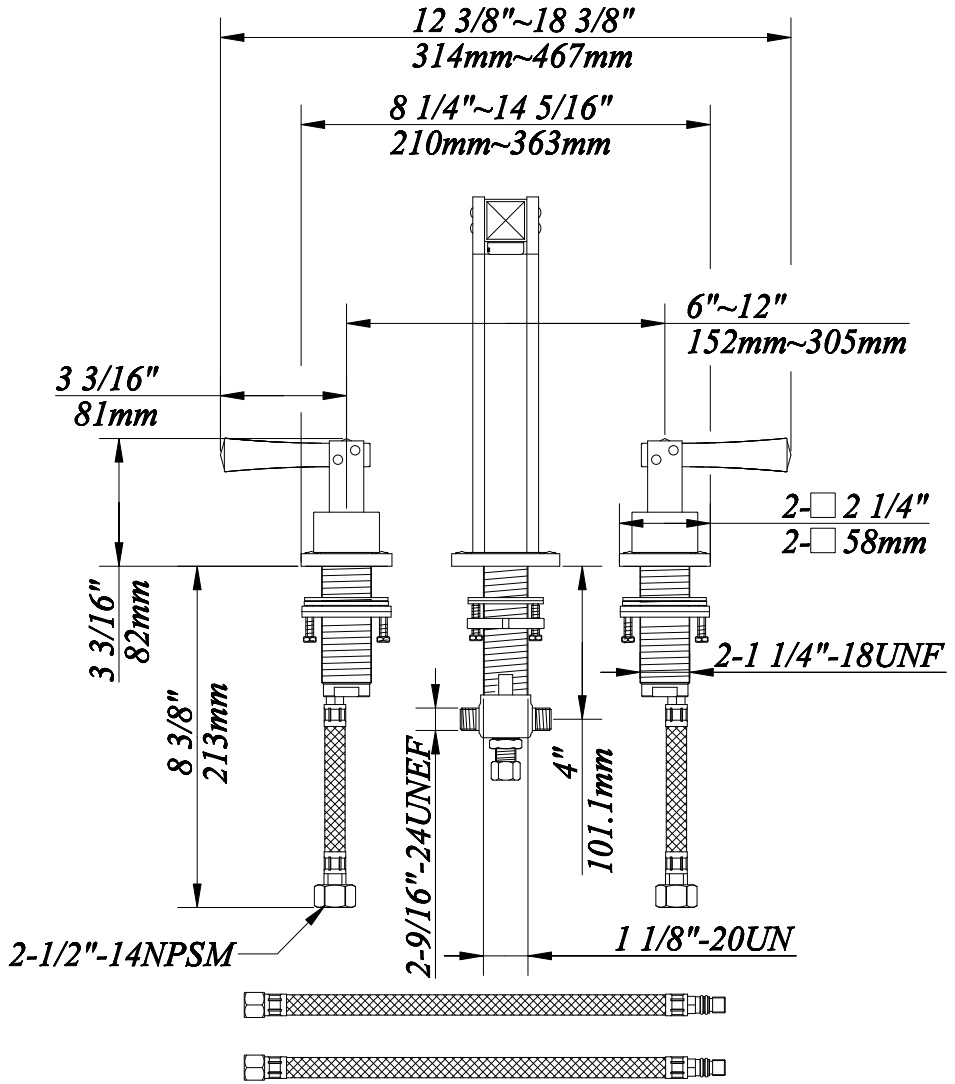

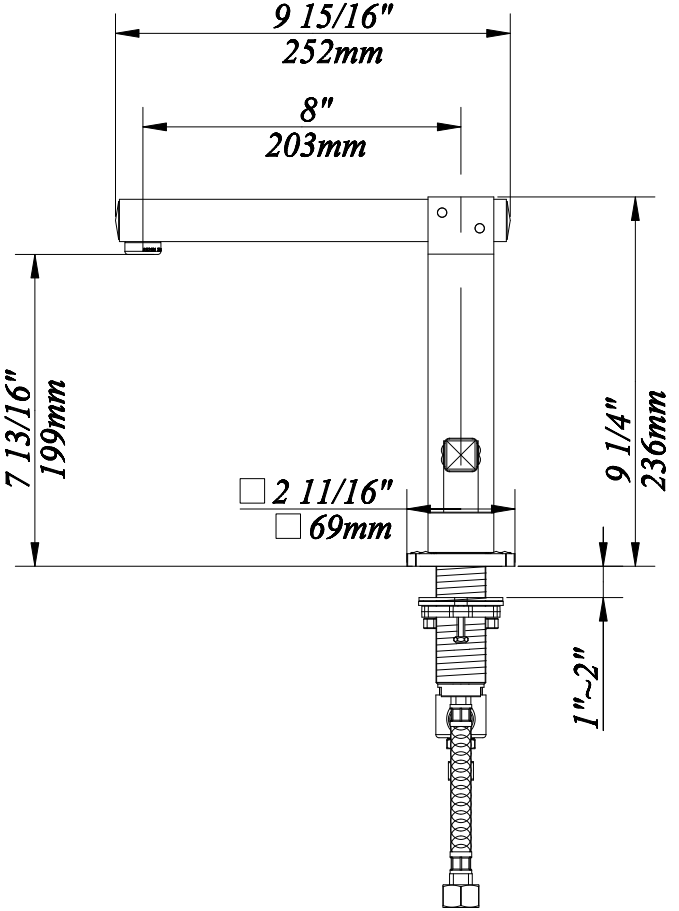

ZONE	DESCRIPTION	BY	DATE	APPROVE
	Ceramic disc Valve Cartridges as Standard			
	Providing a flow rate of 8.3LPM at 60psi			

REVISIONS

REVIEW	
CHECK	
DESIGN	Dan Kennard
DRAWN	Dan Kennard
DATE	2005.10.27

FUSION HARDWARE GROUP.

TITLE:	8" Kitchen Faucet
ITEM	SFSONKIT
REV	A
SCALE	1:5
MATERIAL	
SIZE	A4
SHEET	OF 1