Ferlo ECMH 3-2 Contemporary

Electric

Technical information

- Hard Wire
- 120VAC 60HZ
- 0.91 Amps
- 5 Year Warranty

ECMH3/2 Technical Sheet

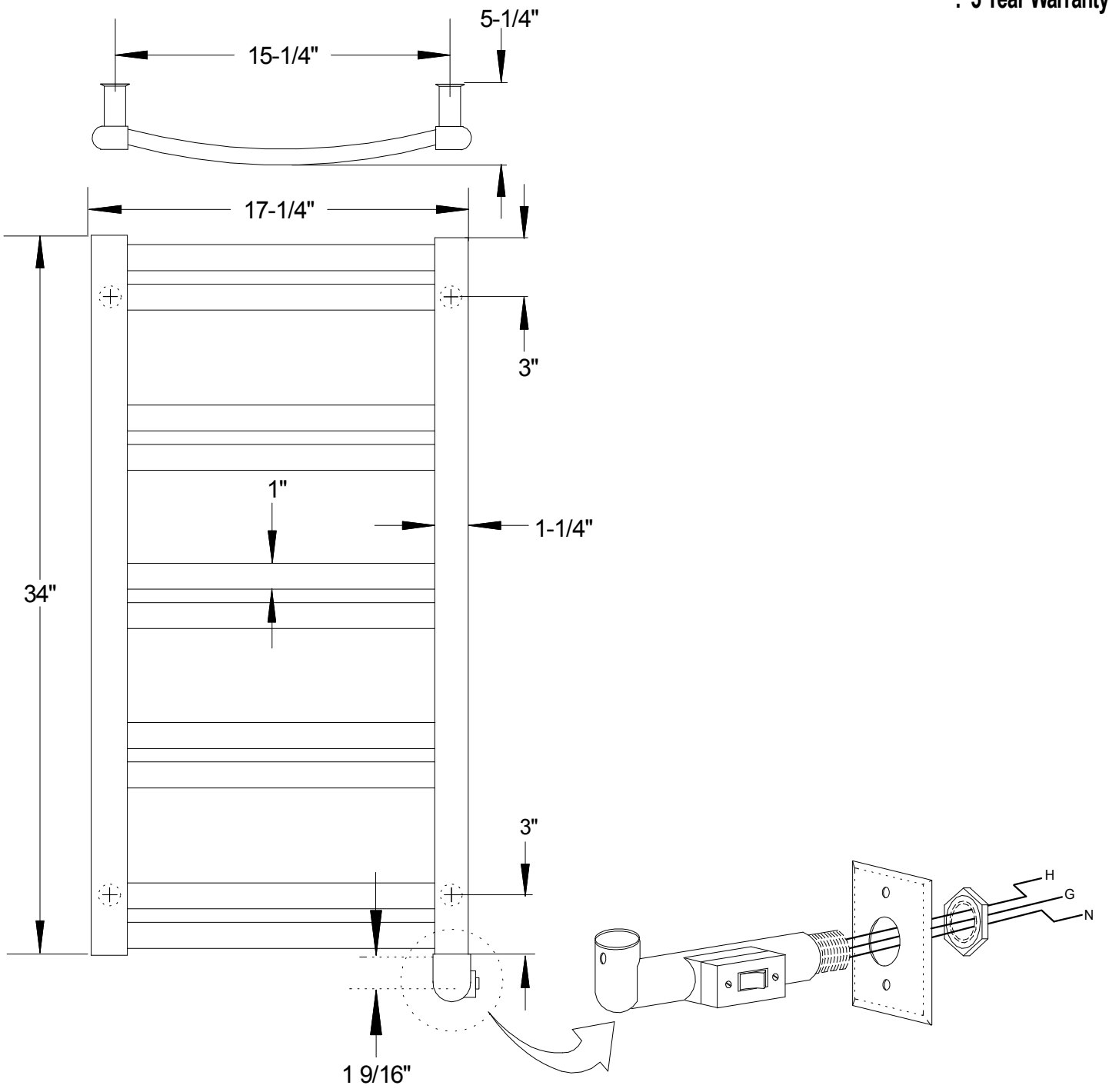

Myson, Inc., 948 Hercules Drive, Suite 4 Colchester, VT 05446 • 1-800-698-9690 • www.mysoninc.com