ROHL
The Experience of Authentic Luxury™

www.rohlhome.com

Single Lever Faucet

Rohl Country Kitchen Collection

A3408
A3408WS (With Handspray)

FEATURES

- Ceramic disc single lever cartridge
- 9" reach
- ⅜" compression flexible supplies
- Metal lever only

COLORS/FINISHES

- Polished Chrome
- Polished Nickel
- Satin Nickel
- Tuscan Brass
- Inca Brass

WARRANTY

- Limited Lifetime*

* No Warranty on Tuscan Brass Finish (TCB)

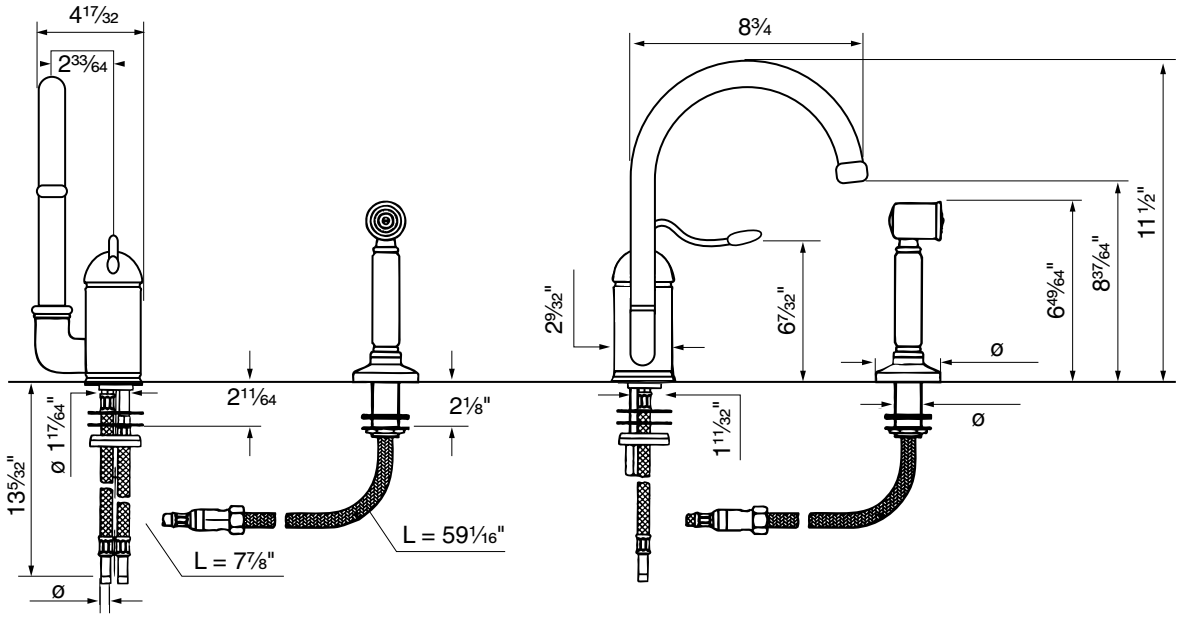

Consult your local Rohl showroom for additional information and specifications. For complete warranty details and a list of showrooms, go to www.rohlhome.com.

ROHL
The Experience of Authentic Luxury

www.rohlhome.com

A3408 Spare Parts

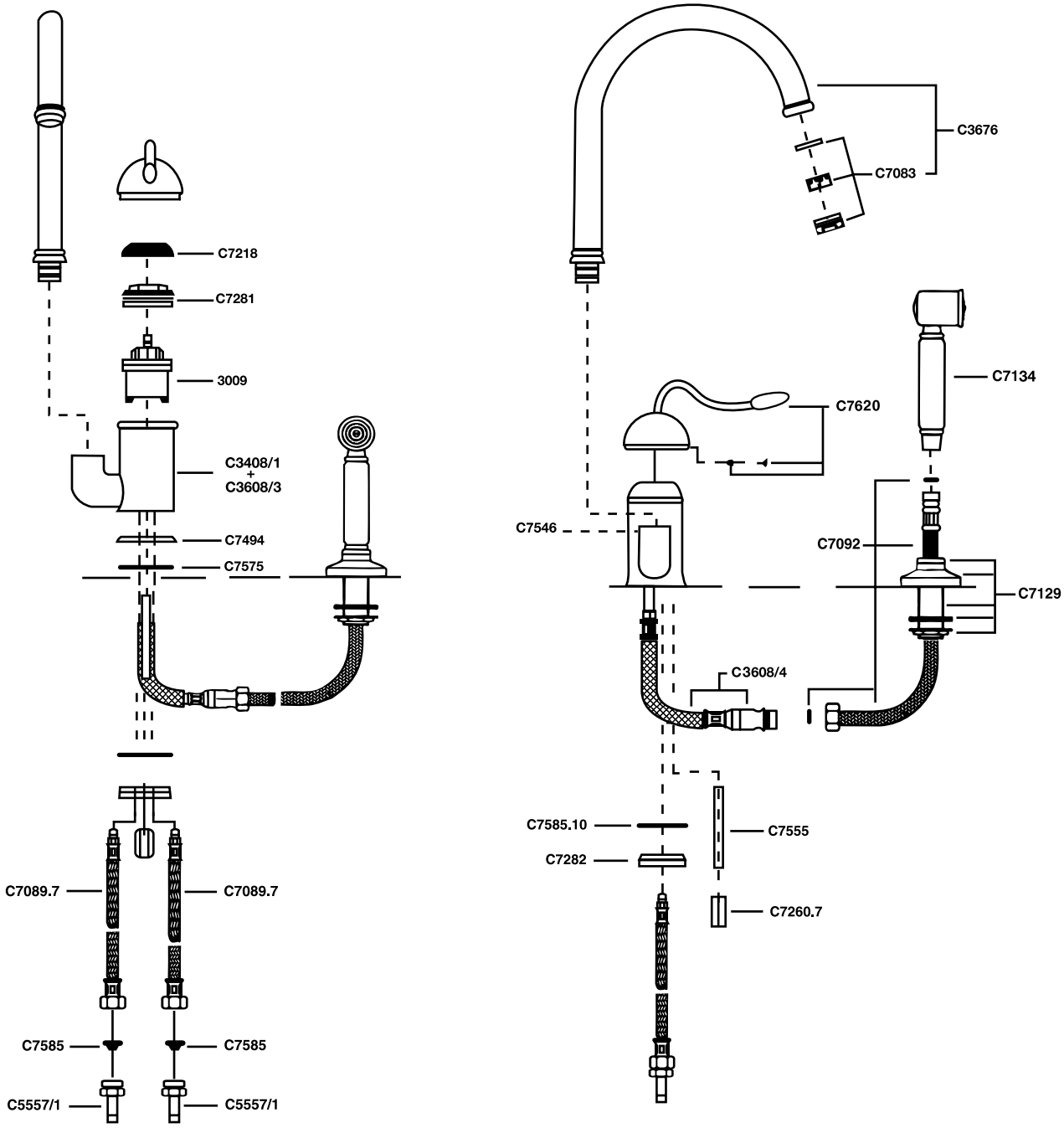

Consult your local Rohl showroom for additional information and specifications. For complete warranty details and a list of showrooms, go to www.rohlhome.com.