ROHL
The Experience of Authentic Luxury™

www.rohlhome.com

Single Lever Faucet with Optional Handspray

Rohl Country Kitchen Collection

A3608 LP WS (Porcelain Lever with Handspray)
A3608 LM WS (Metal Lever with Handspray)
A3608 LP (Porcelain Lever)
A3608 LM (Metal Lever)

Bar version with 6 1/2" spout available: A3608/6.5LM OR A3608/6.5LP
With side spray: A3608/6.5LMWS OR A3608/6.5LPWS

Long Spout version with 11" spout available: A3608/11LM OR A3608/11LP
With side spray: A3608/11LMWS OR A3608/11LPWS

FEATURES

- Ceramic disc single lever cartridge
- 9" reach
- 3/8" compression flexible supplies
- Max water pressure: 70 psi

COLORS/FINISHES

- Polished Chrome
- Polished Nickel
- Satin Nickel
- Tuscan Brass
- Inca Brass

WARRANTY

Limited lifetime

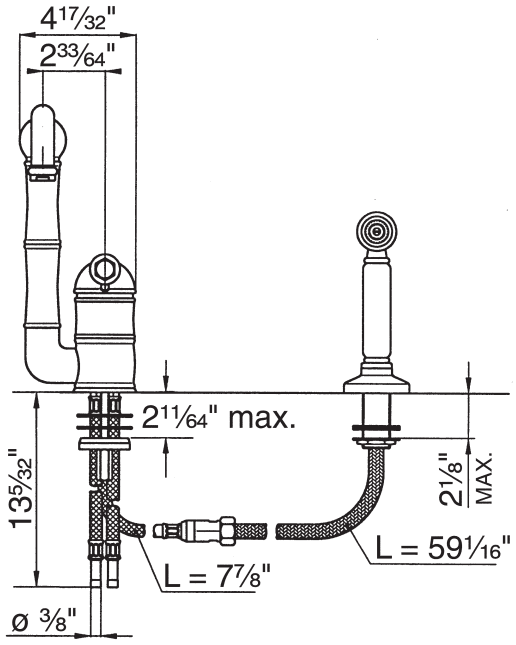

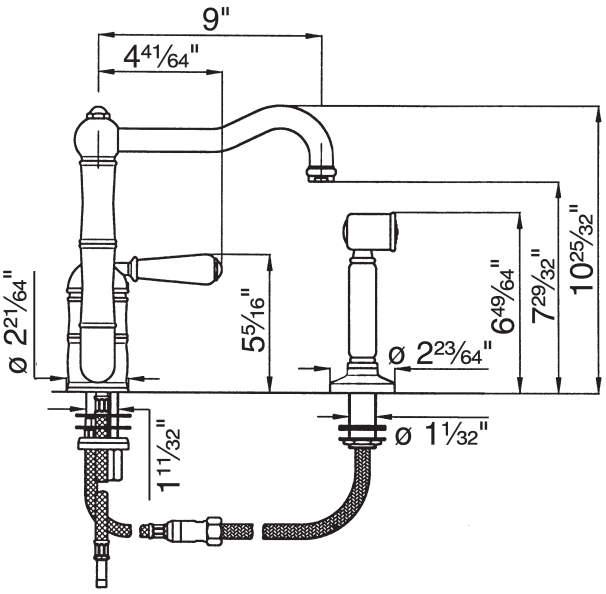

Consult your local Rohl showroom for additional information and specifications. For complete warranty details and a list of showrooms, go to www.rohlhome.com.

ROHL
The Experience of Authentic Luxury™

www.rohlhome.com

A3608 Spare Parts

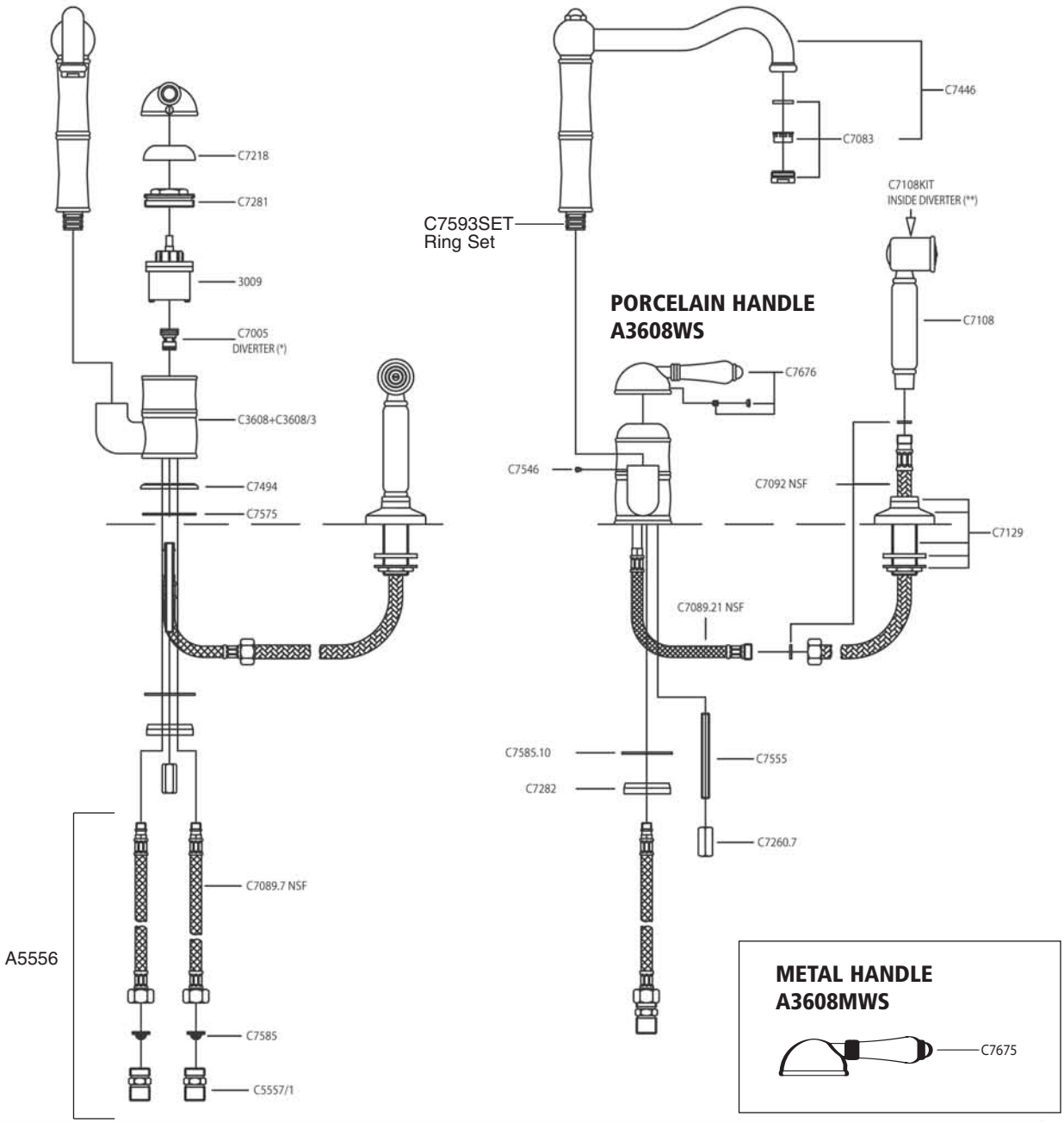

Consult your local Rohl showroom for additional information and specifications. For complete warranty details and a list of showrooms, go to www.rohlhome.com.