Installation Instructions
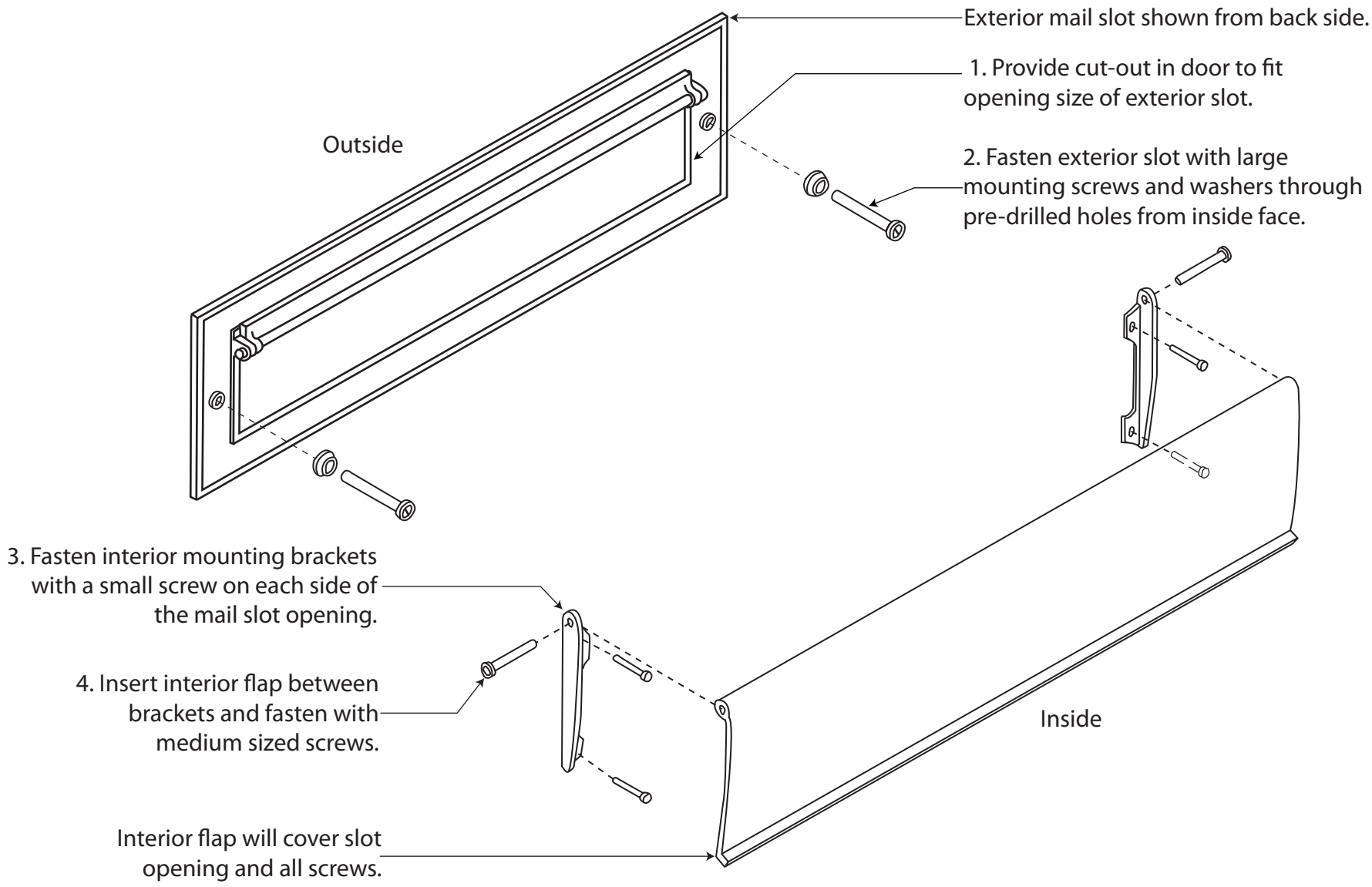
Heavy Duty Post Mail Slot