Installation Instructions
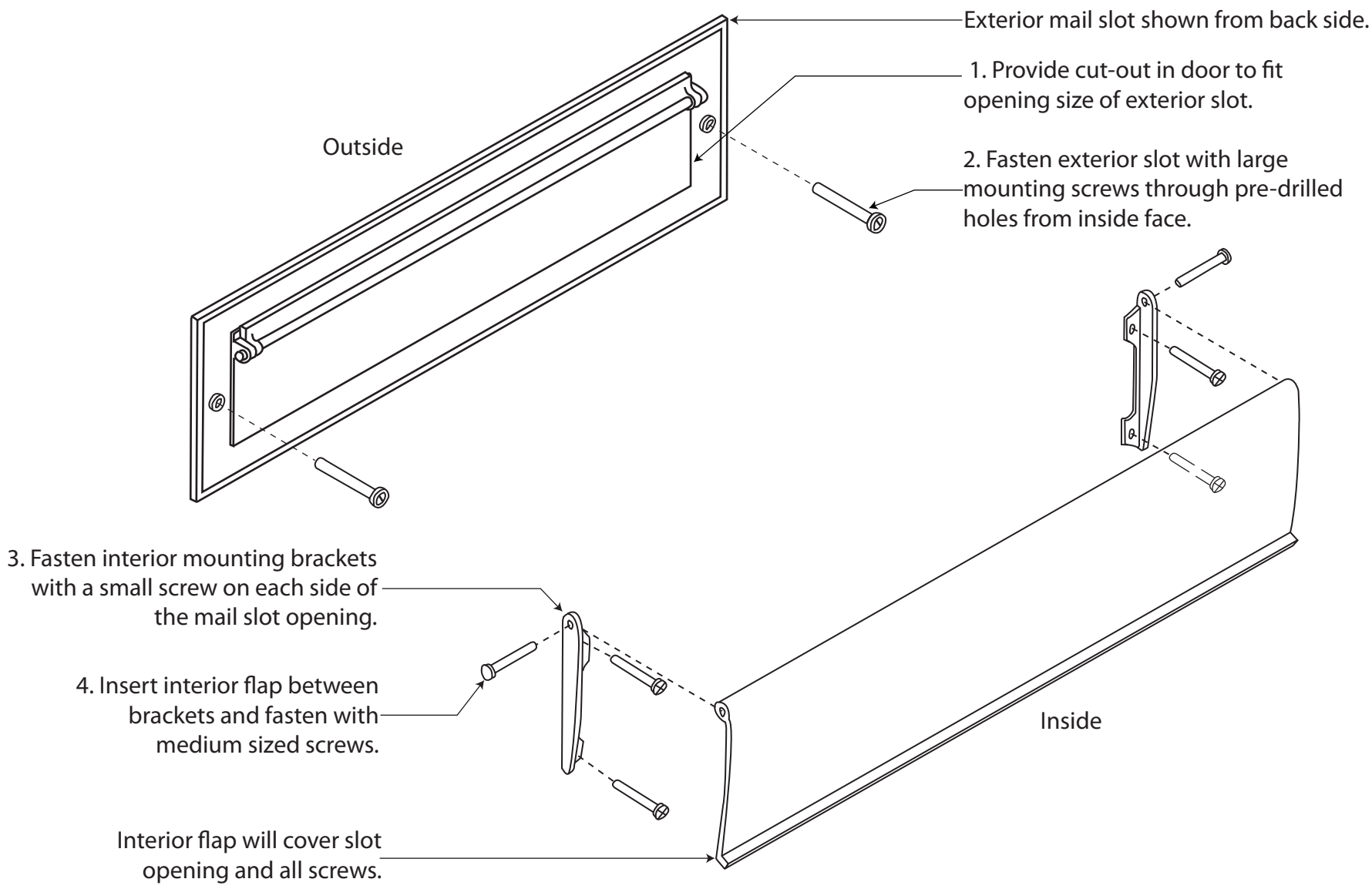
Heavy Brass Mail Slot